# LP SERIES-GENERAL PURPOSE

LP12-1.2 (12V1.2Ah)

LEOCH BATTERY

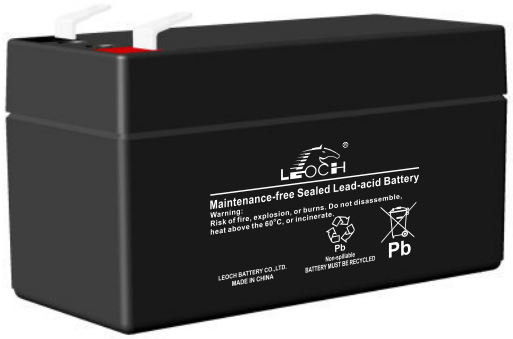


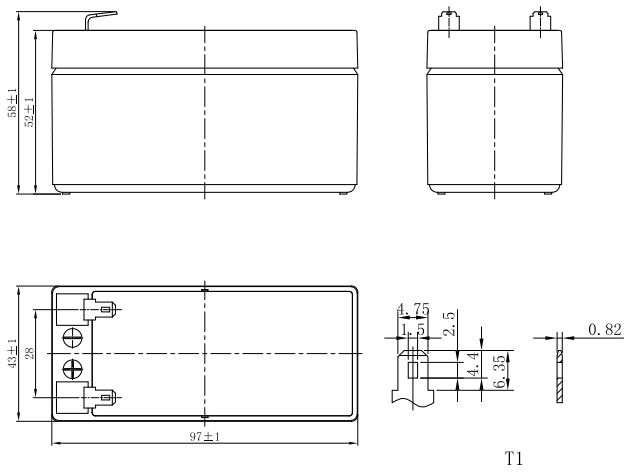


## CHARACTERISTICS

| Item | | Specifications |
|---|---|---|
| Rated Voltage | | 12V |
| Nominal Capacity (25℃) | $C_{20}$,1.75V/cell | 1.2Ah |
| Dimension | Length | 97mm (3.82inches) |
| | Width | 43mm (1.69inches) |
| | Container Height | 52mm (2.05inches) |
| | Total Height | 58mm (2.28inches) |
| Approx Weight | | 0.48kg (1.06lbs) |
| Terminal | | T1 |
| Container Material | | ABS (UL94 HB or V-0 optional) |
| Short-circuit current | | 33.6A |
| Internal Resistance (25℃) | | Approx 117 mΩ (Fully charged) |
| Operating Temp. Range | Discharge | -15~50℃ (5~122°F) |
| | Charge | -20~40℃ (-4~104°F) |
| | Storage | -15~40℃ (5~104°F) |
| Nominal Operating Temp. Range | | 25±3℃ (77±5°F) |
| Max.Charging Current (25℃) | | 0.3C |
| Charge voltage (25℃) | Standby Use | Cycle Use |
| | 2.25-2.30V/cell | 2.35-2.45V/cell |
| Temp. Coeffcient | -3mV/cell/℃ | -5mV/cell/℃ |
| Effect of temp. to Capacity | 40℃ (104°F) | 103% |
| | 25℃ (77°F) | 100% |
| | 0℃ (32°F) | 86% |
| Self Discharge | ≤3% per month at 25°C (77°F).<br>LP series batteries may be stored up to 6 months at 25°C (77°F) and then a freshening charge is required.<br>For higher temperatures the time interval will be shorter. | |

## DISCHARGE TABLE

**Constant Current Discharge (Amperes) at 25°C (77°F)**

| F.V/Time | 5min | 10min | 15min | 20min | 30min | 45min | 1h | 1.5h | 2h | 3h | 4h | 5h | 6h | 8h | 10h | 20h |
|---|---|---|---|---|---|---|---|---|---|---|---|---|---|---|---|---|
| 1.85V/cell | 3.73 | 2.28 | 1.78 | 1.48 | 1.10 | 0.813 | 0.714 | 0.523 | 0.411 | 0.296 | 0.236 | 0.201 | 0.172 | 0.136 | 0.111 | 0.059 |
| 1.80V/cell | 4.01 | 2.42 | 1.86 | 1.54 | 1.14 | 0.835 | 0.731 | 0.534 | 0.418 | 0.301 | 0.240 | 0.204 | 0.175 | 0.138 | 0.112 | 0.059 |
| 1.75V/cell | 4.23 | 2.52 | 1.92 | 1.59 | 1.17 | 0.853 | 0.746 | 0.543 | 0.426 | 0.306 | 0.243 | 0.207 | 0.177 | 0.139 | 0.113 | 0.060 |
| 1.70V/cell | 4.43 | 2.62 | 1.99 | 1.63 | 1.20 | 0.872 | 0.760 | 0.553 | 0.432 | 0.311 | 0.246 | 0.209 | 0.179 | 0.141 | 0.114 | 0.060 |
| 1.67V/cell | 4.58 | 2.69 | 2.04 | 1.67 | 1.22 | 0.886 | 0.771 | 0.560 | 0.437 | 0.314 | 0.249 | 0.211 | 0.181 | 0.142 | 0.115 | 0.061 |
| 1.60V/cell | 4.86 | 2.80 | 2.11 | 1.72 | 1.25 | 0.908 | 0.789 | 0.572 | 0.446 | 0.319 | 0.253 | 0.215 | 0.183 | 0.144 | 0.117 | 0.062 |

**Constant Power Discharge (Watts/cell) at 25°C (77°F)**

| F.V/Time | 5min | 10min | 15min | 20min | 30min | 45min | 1h | 1.5h | 2h | 3h | 4h | 5h | 6h | 8h | 10h | 20h |
|---|---|---|---|---|---|---|---|---|---|---|---|---|---|---|---|---|
| 1.85V/cell | 7.06 | 4.34 | 3.40 | 2.86 | 2.13 | 1.58 | 1.39 | 1.02 | 0.804 | 0.583 | 0.465 | 0.397 | 0.341 | 0.269 | 0.220 | 0.117 |
| 1.80V/cell | 7.52 | 4.57 | 3.55 | 2.96 | 2.19 | 1.61 | 1.42 | 1.04 | 0.817 | 0.591 | 0.471 | 0.402 | 0.345 | 0.273 | 0.223 | 0.119 |
| 1.75V/cell | 7.84 | 4.72 | 3.64 | 3.02 | 2.23 | 1.64 | 1.44 | 1.05 | 0.830 | 0.599 | 0.477 | 0.407 | 0.349 | 0.275 | 0.225 | 0.120 |
| 1.70V/cell | 8.13 | 4.87 | 3.74 | 3.09 | 2.28 | 1.67 | 1.46 | 1.07 | 0.840 | 0.607 | 0.483 | 0.412 | 0.353 | 0.278 | 0.227 | 0.121 |
| 1.67V/cell | 8.34 | 4.98 | 3.82 | 3.15 | 2.32 | 1.70 | 1.48 | 1.08 | 0.848 | 0.612 | 0.487 | 0.415 | 0.356 | 0.280 | 0.229 | 0.122 |
| 1.60V/cell | 8.68 | 5.13 | 3.92 | 3.23 | 2.37 | 1.73 | 1.51 | 1.10 | 0.862 | 0.621 | 0.494 | 0.420 | 0.360 | 0.284 | 0.232 | 0.123 |

# LP SERIES-GENERAL PURPOSE

LP12-1.2 (12V1.2Ah)

LEOCH BATTERY

## APPLICATIONS

- Uninterruptable Power Supply (UPS)
- Electric Power System (EPS)
- Emergency backup power supply
- Alarm and security system
- Communication power supply
- DC power supply
- Auto control system

## GENERAL FEATURES

- 5 years design life (25℃)
- Lead calcium alloy, sealed design, no watering required
- Puncture resistant micro-porous glass mat separators extend life
- Unique technology optimizes power capacity, cell consistency, and long-term reliability
- Designed for a wide range of applications

## STANDARDS

- Compliance with IEC 60896 standards, EU Battery Directive
- UL,CE Approved
- Manufactured in Leoch®IATF 16949, ISO 45001, ISO 9001 and ISO 14001 certified production facilities

## Discharge Characteristics

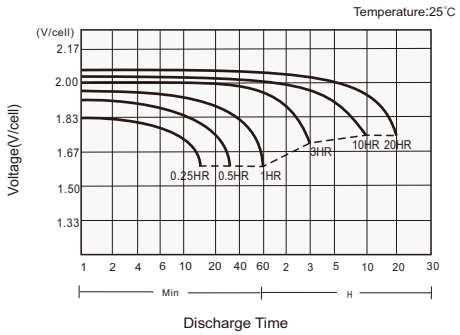


## Charging Characteristics

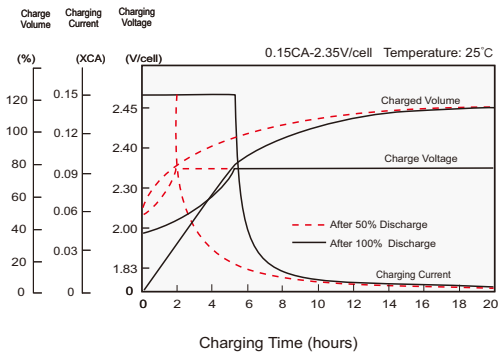


## Effects of Temperature on Capacity

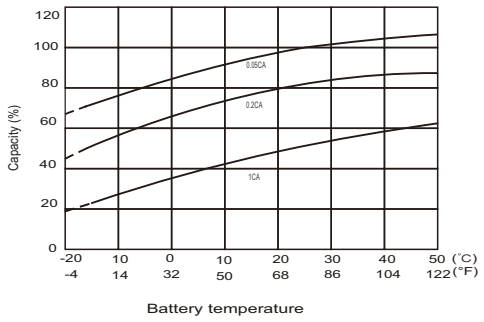


## Self Discharge Characteristics

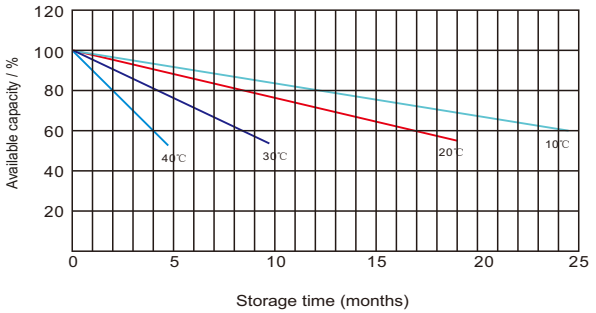



**Leoch International Technology Ltd.**
www.leoch.com

**Leoch Batteries Pte Ltd**
www.leoch.sg

**Leoch Battery Corporation**
www.leochamericas.com

**Leoch Europe S.A.**
www.leoch.eu



Data above is recommended and the picture is only for battery effect display, Leoch reserve the final right of explanation.
© LEOCH. All rights reserved.Trademarks and logos are the property of LEOCH and its affiliates unless otherwise noted.Subject to revisions without prior notice. E&OE.



Publication No.:LB-LP12-1.2-PD-EN-V4.0-20260810