CONVENTIONAL FLOODED MOTORCYCLE BATTERY

LB9L-B(J) (12V9Ah)

LEOCH BATTERY



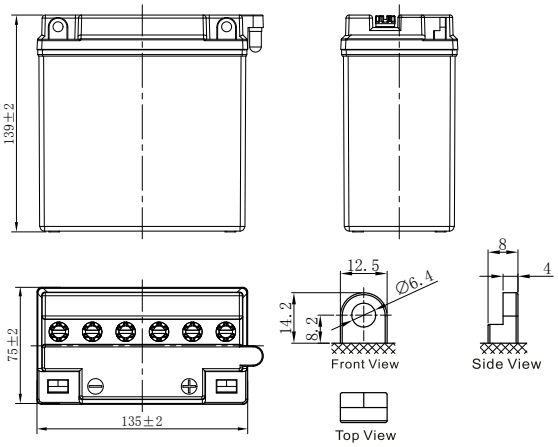

CHARACTERISTICS

Item		Specifications
Nominal Voltage		12V
Nominal Capacity (10HR)		9Ah
Cold Cranking Performance Amps@0°F (-18°C)		70A
Dimension (±2mm)	Length	135mm (5.31inches)
	Width	75mm (2.95inches)
	Container Height	139mm (5.47inches)
	Total Height	139mm (5.47inches)
Battery (with acid)	Approx Weight	2.81kg (6.19lbs)
Electrolyte	Approx Weight	0.79kg (1.74lbs)
Terminal type		B
Battery type	Conventional Flooded (High Perfoemance) Series	
Full Charge	Constant-Voltage Charge:	
	Initial charging current	Less than $0.3C_{10}$
	Voltage	14.40V~15.00V at 25°C (77°F)
	Charging time	16~24h
	Constant-Current Charge:	
	Charging current $0.1C_{10}$, when charging voltage up to 15.60V, continue to charge 2h	
Floating Charge	Initial charging current	Unlimited
	Voltage	13.50V~13.80V at 25°C (77°F)
Capacity affected by Temperature	40°C (104°F)	106%
	25°C (77°F)	100%
	0°C (32°F)	86%
	-15°C (5°F)	65%

Discharge Characteristics (25°C, 77°F)

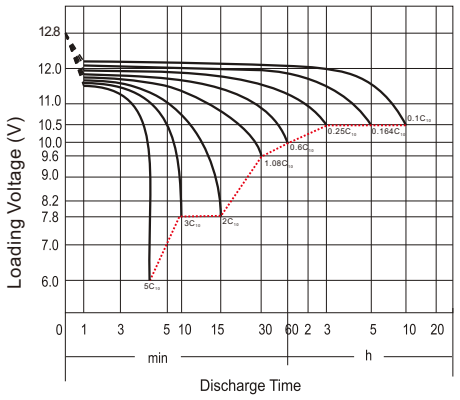

GENERAL FEATURES

- Low maintenance
- High performance and dry charged high quality and flooded battery
- Shipped in dry condition with a separated acid pack

*Values are subject to variation of +/- 5% in normal manufacturing processes.

Data above is recommended and the picture is only for battery effect display, Leoch reserve the final right of explanation.

© LEOCH. All rights reserved.Trademarks and logos are the property of LEOCH and its affiliates unless otherwise noted.Subject to revisions without prior notice. E&OE.

Publication No.:LB-LB9L-B(J)-PD-EN-V2.0-20251209