CONVENTIONAL FLOODED MOTORCYCLE BATTERY

LB16L-B (12V19Ah)

LEOCH BATTERY



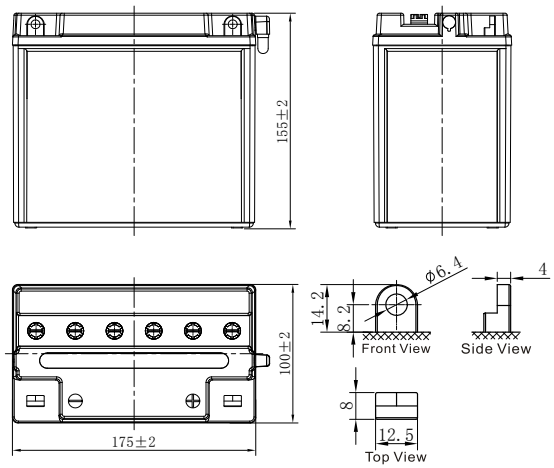

CHARACTERISTICS

Item		Specifications
Nominal Voltage		12V
Nominal Capacity (10HR)		19Ah
Cold Cranking Performance Amps@0°F (-18°C)		220A
Dimension (±2mm)	Length	175mm (6.89inches)
	Width	100mm (3.94inches)
	Container Height	155mm (6.10inches)
	Total Height	155mm (6.10inches)
Battery (with acid)	Approx Weight	6.06kg (13.4lbs)
Electrolyte	Approx Weight	1.63kg (3.59lbs)
Terminal type		B
Battery type	Conventional Flooded (High Perfoemance) Series	
Full Charge	Constant-Voltage Charge:	
	Initial charging current	Less than $0.3C_{10}$
	Voltage	14.40V~15.00V at 25°C (77°F)
	Charging time	16~24h
	Constant-Current Charge:	
	Charging current $0.1C_{10}$, when charging voltage up to 15.60V, continue to charge 2h	
Floating Charge	Initial charging current	Unlimited
	Voltage	13.50V~13.80V at 25°C (77°F)
Capacity affected by Temperature	40°C (104°F)	106%
	25°C (77°F)	100%
	0°C (32°F)	86%
	-15°C (5°F)	65%

Discharge Characteristics (25°C, 77°F)

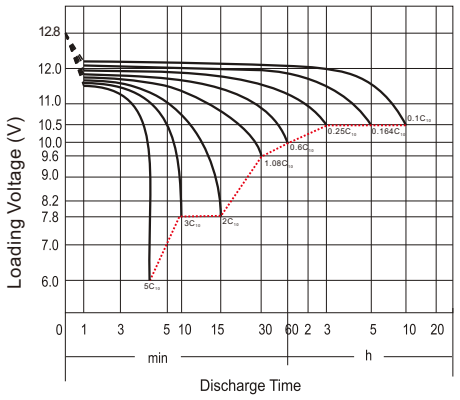

GENERAL FEATURES

- Low maintenance
- High performance and dry charged high quality and flooded battery
- Shipped in dry condition with a separated acid pack

*Values are subject to variation of +/- 5% in normal manufacturing processes.

Leoch International Technology Ltd.
www.leoch.com

Leoch Batteries Pte Ltd
www.leoch.sg

Leoch Battery Corporation
www.leochamericas.com

Leoch Europe S.A.
www.leoch.eu

Data above is recommended and the picture is only for battery effect display, Leoch reserve the final right of explanation.
© LEOCH. All rights reserved.Trademarks and logos are the property of LEOCH and its affiliates unless otherwise noted.Subject to revisions without prior notice. E&OE.

Publication No.:LB-LB16L-B-PD-EN-V2.0-20251209