MAINTENANCE-FREE MOTORCYCLE BATTERY

EB12E-4 (12V12Ah)

LEOCH BATTERY



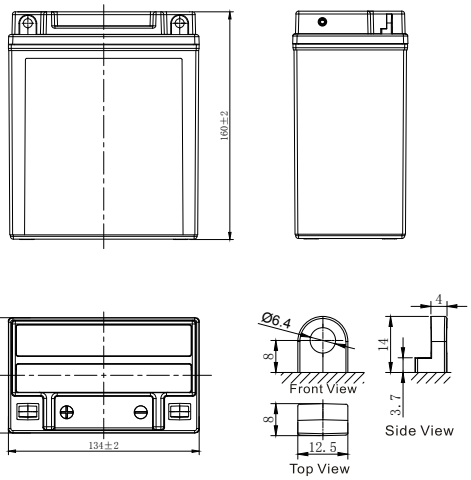

CHARACTERISTICS

Item		Specifications
Nominal Voltage		12V
Nominal Capacity (10HR)		12Ah
Cold Cranking Performance Amps@0°F (-18°C)		140A
Dimension (±2mm)	Length	134mm (5.28inches)
	Width	81mm (3.19inches)
	Container Height	160mm (6.30inches)
	Total Height	160mm (6.30inches)
Battery (with acid)	Approx Weight	3.88kg (8.55lbs)
Terminal type		B
Battery type	Factory Activated Series	
Full Charge	Constant-Voltage Charge:	
	Initial charging current	Less than 0.3C_{10}
	Voltage	14.40V~15.00V at 25°C (77°F)
	Charging time	15~18h
	Constant-Current Charge:	
	Charging current 0.1C_{10}, when charging voltage up to 14.40V, continue to charge 4h	
Floating Charge	Initial charging current	Unlimited
	Voltage	13.50V~13.80V at 25°C (77°F)
Capacity affected by Temperature	40°C (104°F)	106%
	25°C (77°F)	100%
	0°C (32°F)	86%
	-15°C (5°F)	65%

Discharge Characteristics (25°C, 77°F)

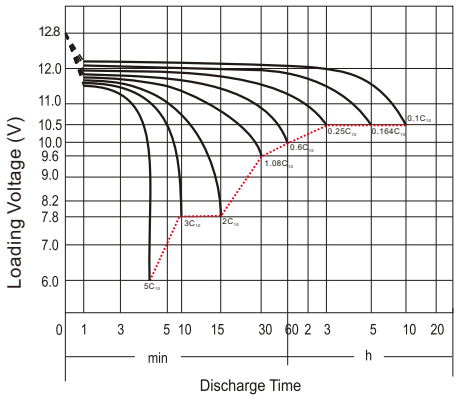

GENERAL FEATURES

- Maintenance-free
- Sealed and non-spillable AGM battery
- Shipped pre-charged and ready to install

*Values are subject to variation of +/- 5% in normal manufacturing processes.

Leoch International Technology Ltd.
www.leoch.com

Leoch Batteries Pte Ltd
www.leoch.sg

Leoch Battery Corporation
www.leochamericas.com

Leoch Europe S.A.
www.leoch.eu

Data above is recommended and the picture is only for battery effect display, Leoch reserve the final right of explanation.
© LEOCH. All rights reserved.Trademarks and logos are the property of LEOCH and its affiliates unless otherwise noted.Subject to revisions without prior notice. E&OE.

Publication No.:LB-EB12E-4-PD-EN-V1.1-20260131