HEAVY DUTY FLOODED BATTERY

115F51R (12V120Ah)

LEOCH BATTERY



CHARACTERISTICS

Item		Specifications
Nominal Voltage		12V
Nominal Capacity (20HR)		120Ah
Reserve Capacity		223min
Cold Cranking Amps@0°F (-18°C)		800A
Dimension	Length	504mm (19.8inches)
	Width	183.5mm (7.22inches)
	Height	223mm (8.78inches)
Approx Weight		32.6kg (71.9lbs)
Terminal		1
Cell layout		3
Hold-Down		B0
Case		Black-PP Material
Cover		Black-PP Material
Handle		TS8

APPLICATIONS

- Commercial vehicle start
- Engine start

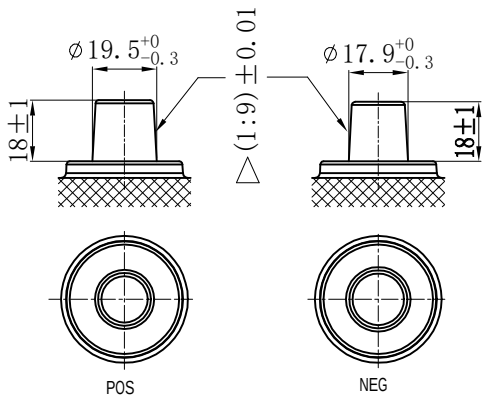

GENERAL FEATURES

- High capacity and high CCA
- Maintenance-free
- High vibration resistance
- Strong lead-calcium alloy grids for great corrosion resistance
- High strength PP case and cover no need be worried about breakage
- OE quality certification

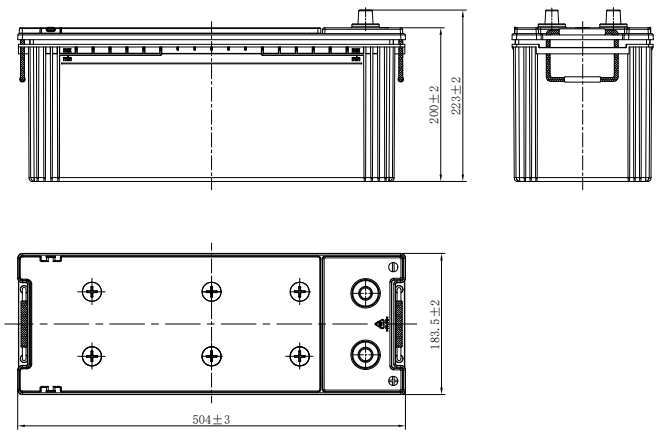

*Values are subject to variation of +/- 5% in normal manufacturing processes.

Leoch International Technology Ltd.
www.leoch.com

Leoch Batteries Pte Ltd
www.leoch.sg

Leoch Battery Corporation
www.leochamericas.com

Leoch Europe S.A.
www.leoch.eu

Data above is recommended and the picture is only for battery effect display, Leoch reserve the final right of explanation.
© LEOCH. All rights reserved.Trademarks and logos are the property of LEOCH and its affiliates unless otherwise noted.Subject to revisions without prior notice. E&OE.

Publication No.:LB-115F51R-PD-EN-V1.0-20250104