FLOODED BATTERY

95E41L (12V100Ah)

LEOCH BATTERY



CHARACTERISTICS

Item		Specifications
Nominal Voltage		12V
Nominal Capacity (20HR)		100Ah
Reserve Capacity		179min
Cold Cranking Amps@0°F (-18°C)		750A
Dimension	Length	408mm (16.1inches)
	Width	170mm (6.69inches)
	Height	233mm (9.17inches)
Approx Weight		25.9kg (57.1lbs)
Terminal		1
Cell layout		0
Hold-Down		B0
Case		Black-PP Material
Cover		Black-PP Material
Handle		TS8

APPLICATIONS

- Car start
- EV/HEV
- Engine start

GENERAL FEATURES

- High capacity and high CCA
- Long life
- Advanced lead-calcium alloy technology, maintenance-free design
- Patented venting system bring less water loss and prevent acid leakage
- OE quality certification

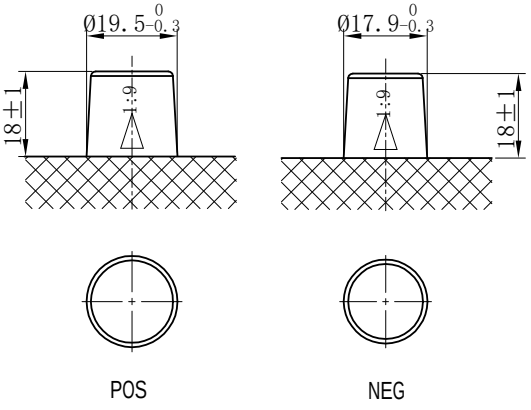

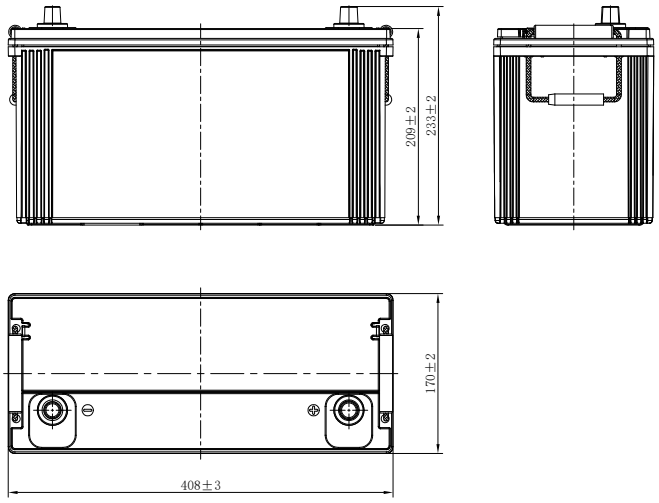

*Values are subject to variation of +/- 5% in normal manufacturing processes.

Leoch International Technology Ltd.
www.leoch.com

Leoch Batteries Pte Ltd
www.leoch.sg

Leoch Battery Corporation
www.leochamericas.com

Leoch Europe S.A.
www.leoch.eu

Data above is recommended and the picture is only for battery effect display, Leoch reserve the final right of explanation.
© LEOCH. All rights reserved.Trademarks and logos are the property of LEOCH and its affiliates unless otherwise noted.Subject to revisions without prior notice. E&OE.

Publication No.:LB-95E41L-PD-EN-V1.0-20241228